Type CSKV (conduit and cable fitting)

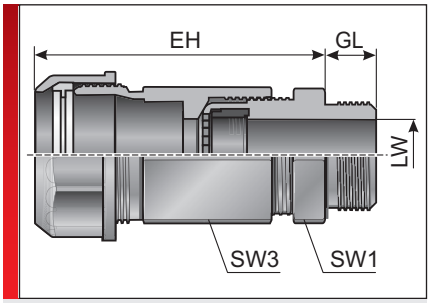

PRODUCT INFORMATION

The CSKV conduit and cable fitting is a combination of our proven WKK cable fitting and the EH conduit fitting.
The fittings are made of specially modified polyamide.
The materials are halogen, phosphor and cadmium-free.

The CSKV conduit and cable fittings feature the following advantages:

- No parts can get lost, delivered completely assembled
- Tightness of IP 65 for static and dynamic application
- Integrated clamping ring ensures high tear-out strength
- Optimum strain relief for the cable due to iris-shaped lamellae

Specification:

- UL listed E 148958
- EN 45545-2:2013 3x HL3

SPECIFICATIONS

Fitting: Mod. polyamide PA 6
Moulded seal: Perbunan (NBR)

IP 65

-40 – 110 °C transient / short term 140 °C

V0 self-extinguishing

Type	Order No.	Colour	Connecting thread	Suitable for Murrflex	EH mm	GL mm	Clamping range (LW) mm	SW 1 / 3 mm	Pack qty.
Metric thread									
CSKV-M16x1,5/9[1)]	83581850	Black	M16x1,5	M12/P09	45.00	8.00	4.00 – 8.00	19.00 / 19.00	50
CSKV-M16x1,5/11[1)]	83581852	Black	M16x1,5	M16/P11	49.00	8.00	5.00 – 10.00	22.00 / 22.00	50
CSKV-M20x1,5/13,5-16[1)]	83581854	Black	M20x1.5	DN 13	50.00	9.00	6.00 – 12.00	24.00 / 27.00	50
CSKV-M20x1,5/16[1)]	83581856	Black	M20x1.5	M20/P16(S)	52.00	9.00	10.00 – 14.00	27.00 / 27.00	50
CSKV-M25x1.5/21[1)]	83581858	Black	M25x1.5	M25/P21(S)	60.00	11.00	13.00 – 18.00	33.00 / 33.00	50
CSKV-M32x1.5/29[1)]	83581860	Black	M32x1.5	M32/P29(S)	69.00	11.00	18.00 – 25.00	42.00 / 42.00	25
CSKV-M40x1.5/36[1)]	83581862	Black	M40x1.5	M40/P36(S)	88.00	13.00	22.00 – 32.00	53.00 / 53.00	10
CSKV-M63x1.5/48[1)]	83581864	Black	M63x1.5	M50/P48(S)	109.00	14.00	37.00 – 44.00	65.00 / 65.00	10
CSKV-M16x1.5/9[1)]	83581810	Grey	M16x1,5	M12/P09	45.00	8.00	4.00 – 8.00	19.00 / 19.00	50
CSKV-M16x1.5/11[1)]	83581812	Grey	M16x1,5	M16/P11	49.00	8.00	5.00 – 10.00	22.00 / 22.00	50
CSKV-M20x1.5/13.5-16[1)]	83581814	Grey	M20x1.5	DN 13	50.00	9.00	6.00 – 12.00	24.00 / 27.00	50
CSKV-M20x1.5/16[1)]	83581816	Grey	M20x1.5	M20/P16(S)	52.00	9.00	10.00 – 14.00	27.00 / 27.00	50
CSKV-M25x1.5/21[1)]	83581818	Grey	M25x1.5	M25/P21(S)	60.00	11.00	13.00 – 18.00	33.00 / 33.00	50
CSKV-M32x1.5/29[1)]	83581820	Grey	M32x1.5	M32/P29(S)	69.00	11.00	18.00 – 25.00	42.00 / 42.00	25
CSKV-M40x1.5/36[1)]	83581822	Grey	M40x1.5	M40/P36(S)	88.00	13.00	22.00 – 32.00	53.00 / 53.00	10
CSKV-M63x1.5/48[1)]	83581824	Grey	M63x1.5	M50/P48(S)	109.00	14.00	37.00 – 44.00	65.00 / 65.00	10
Pg threads									
CSKV-Pg 09[1)]	83581250	Black	Pg 09	M12/P09	45.00	8.00	4.00 – 8.00	19.00 / 19.00	50
CSKV-Pg 11[1)]	83581252	Black	Pg 11	M16/P11	49.00	8.00	5.00 – 10.00	22.00 / 22.00	50
CSKV-Pg 13,5/16[1)]	83581254	Black	Pg 13.5	M20/P16(S)	52.00	9.00	6.00 – 12.00	24.00 / 27.00	50
CSKV-Pg 16[1)]	83581256	Black	Pg 16	M20/P16(S)	52.00	10.00	10.00 – 14.00	27.00 / 27.00	50
CSKV-Pg 21[1)]	83581258	Black	Pg 21	M25/P21(S)	60.00	11.00	13.00 – 18.00	33.00 / 33.00	50

© Murrplastik Systemtechnik GmbH • proID_65184~20160908~890283~suv_cskv

Type CSKV (conduit and cable fitting)

Type	Order No.	Colour	Connecting thread	Suitable for Murrflex	EH mm	GL mm	Clamping range (LW) mm	SW 1 / 3 mm	Pack qty.
CSKV-Pg 29[1)]	83581260	Black	Pg 29	M32/P29(S)	69.00	11.00	18.00 – 25.00	42.00 / 42.00	25
CSKV-Pg 36[1)]	83581262	Black	Pg 36	M40/P36(S)	88.00	13.00	22.00 – 32.00	53.00 / 53.00	10
CSKV-Pg 48[1)]	83581264	Black	Pg 48	M50/P48(S)	95.00	14.00	37.00 – 44.00	65.00 / 65.00	10
CSKV-Pg 09[1)]	83581210	Grey	Pg 09	M12/P09	45.00	8.00	4.00 – 8.00	19.00 / 19.00	50
CSKV-Pg 11[1)]	83581212	Grey	Pg 11	M16/P11	49.00	8.00	5.00 – 10.00	22.00 / 22.00	50
CSKV-Pg 13,5/16[1)]	83581214	Grey	Pg 13.5	M20/P16(S)	52.00	9.00	6.00 – 12.00	24.00 / 27.00	50
CSKV-Pg 16[1)]	83581216	Grey	Pg 16	M20/P16(S)	52.00	10.00	10.00 – 14.00	27.00 / 27.00	50
CSKV-Pg 21[1)]	83581218	Grey	Pg 21	M25/P21(S)	60.00	11.00	13.00 – 18.00	33.00 / 33.00	50
CSKV-Pg 29[1)]	83581220	Grey	Pg 29	M32/P29(S)	69.00	11.00	18.00 – 25.00	42.00 / 42.00	25
CSKV-Pg 36[1)]	83581222	Grey	Pg 36	M40/P36(S)	88.00	13.00	22.00 – 32.00	53.00 / 53.00	10
CSKV-Pg 48[1)]	83581224	Grey	Pg 48	M50/P48(S)	95.00	14.00	37.00 – 44.00	65.00 / 65.00	10
NPT thread									
CSKV 3/8”-09[1)]	83583250	Black	3/8”	M12/P09	45.00	14.00	4.00 – 8.00	19.00 / 22.00	50
CSKV 1/2”-16[1)]	83583256	Black	1/2”	M20/P16(S)	52.00	13.00	10.00 – 14.00	27.00 / 27.00	50
CSKV 3/4”-21[1)]	83583258	Black	3/4”	M25/P21(S)	60.00	14.00	13.00 – 18.00	33.00 / 33.00	25
CSKV 1”-29[1)]	83583260	Black	1”	M32/P29(S)	69.00	19.00	18.00 – 25.00	42.00 / 42.00	25
CSKV 3/8”-09[1)]	83583210	Grey	3/8”	M12/P09	45.00	14.00	4.00 – 8.00	19.00 / 22.00	50
CSKV 1/2”-16[1)]	83583216	Grey	1/2”	M20/P16(S)	52.00	13.00	10.00 – 14.00	27.00 / 27.00	50
CSKV 3/4”-21[1)]	83583218	Grey	3/4”	M25/P21(S)	60.00	14.00	13.00 – 18.00	33.00 / 33.00	25
CSKV 1”-29[1)]	83583220	Grey	1”	M32/P29(S)	69.00	19.00	18.00 – 25.00	42.00 / 42.00	25
[1)] With cURus- approval									

MATERIAL PROPERTIES

Fitting: Mod. polyamide PA 6
Moulded seal: Perbunan (NBR)

MECHANICAL PROPERTIES

Protection class
IP 65

THERMAL PROPERTIES

Temperature / temperature range
-40 – 110 °C transient / short term 140 °C

FIRE BEHAVIOUR

Fire classification
V0 self-extinguishing

Fire properties as per EN 45545-2: 2009
C.I.T. R22 / R23 HL3 = 0,43
LOI R22 / R23 HL3 = 33,8 %
Ds (max.) R23 HL3 63

© Murrplastik Systemtechnik GmbH • proID_65184~20160908~890283~suv_cskv

Type CSKV (conduit and cable fitting)

APPROVALS AND OPERATING PERMITS

Railway EU approval

cURus approval

TECHNICAL INFORMATION

Halogen-free

CONFORMITY

RoHS (EC Directive 202/95/EC)

GENERAL INFORMATION

Made in Germany

All details given in our sales material prospectuses and catalogues as well as the information available online are based on our current knowledge of the products described.

The electronic data and files made available by Murrplastik, particularly CAD files are based on our current knowledge of the product described.

A legally binding assurance of certain properties or the suitability for a certain purpose can not be determined from this information.

All information with respect to the chemical and physical properties of Murrplastik products as well as application advice given verbally, in writing or by tests, is given to the best of our knowledge.

This does not free the purchaser of carrying out their own inspections and tests in order to determine the suitability of a product for a specific purpose.

Murrplastik accepts no responsibility for the available information being up-to-date, correct or complete. Neither do we accept responsibility for the quality of this information.

Murrplastik accepts no liability for damage caused as a result of using our products.

Murrplastik reserves the right to make technical changes and improvements through constant further development of products and services.

Our General Terms and Conditions apply.

© Murrplastik Systemtechnik GmbH • proID_65184~20160908~890283~suv_cskv